Installation instruction

1. Accessory list(optional)

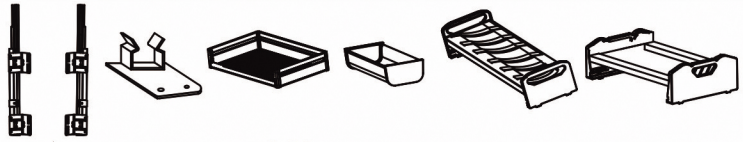

A 4pcs B 4pcs C 2pcs D 3pcs E 1pcs F 1pcs

H 8pcs 20pcs J 8pcs K 4pcs

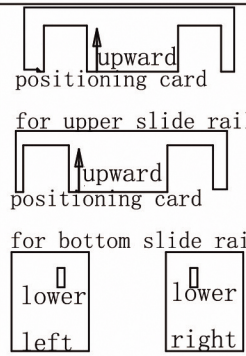

Positioning card

2. Specifications

Model	Size:(D*W*H)mm	Cabinet
BLWL-*00 BLPL-*00	435* (564~864) *150	600mm~900mm

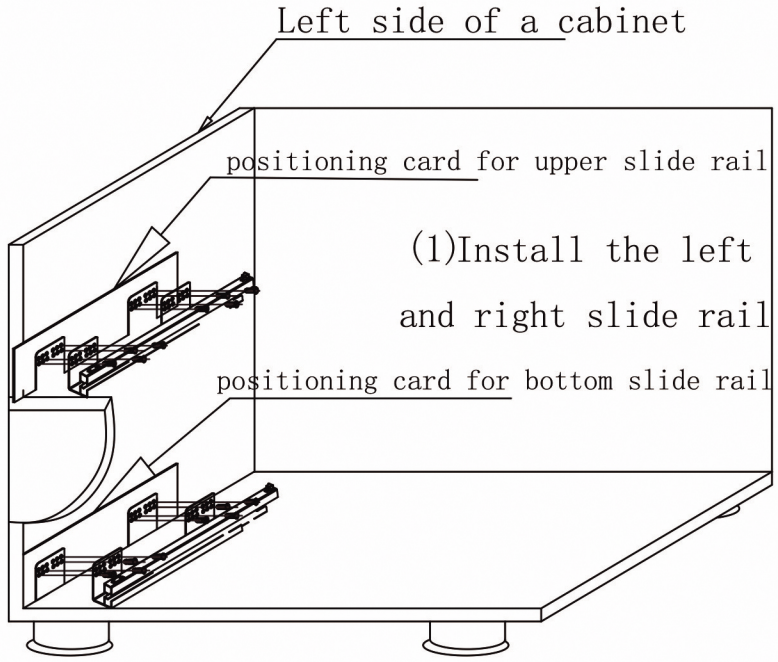

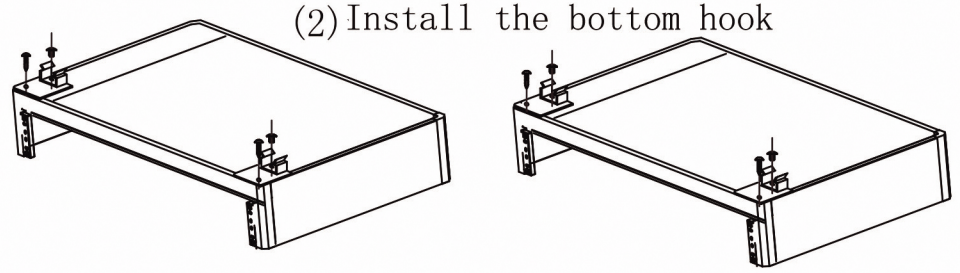

(3) Install the adjusting hook for drawer panel

Top layer of drawer panel

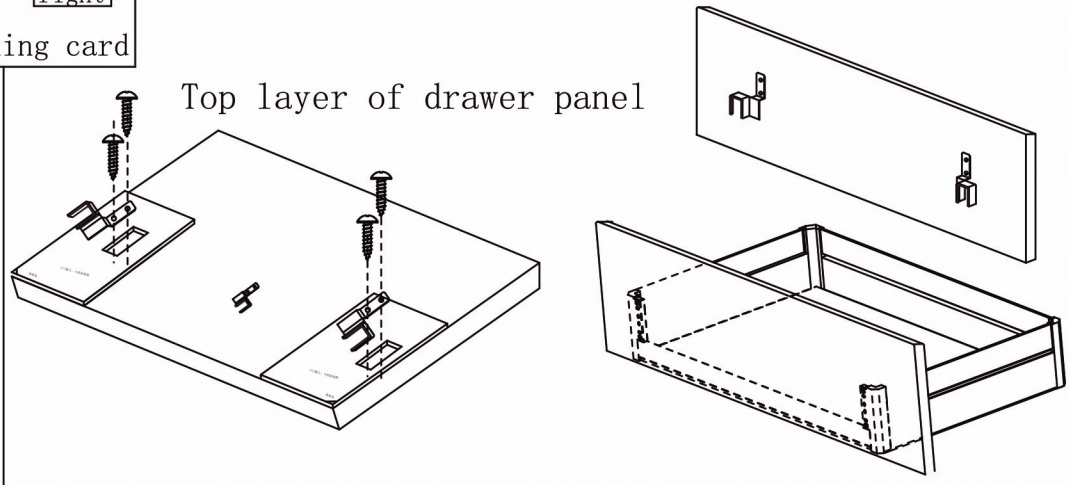
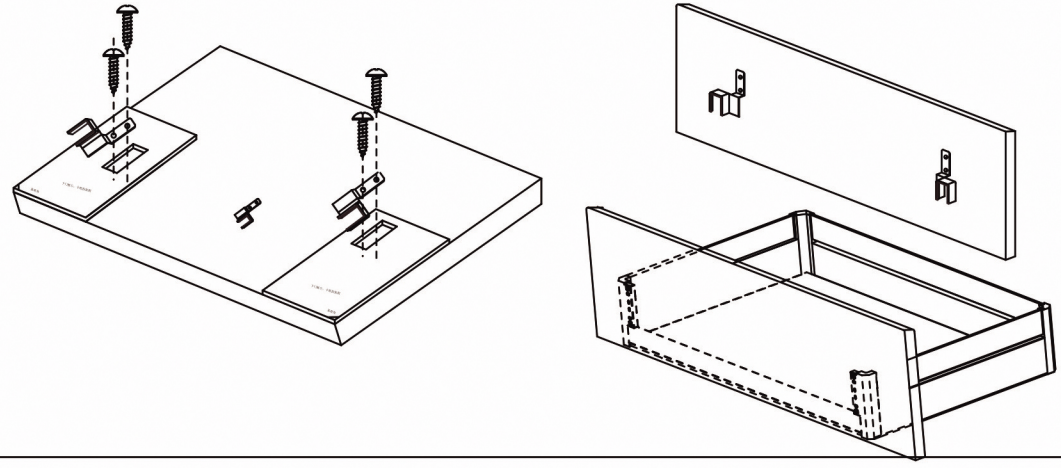
Bottom layer of drawer panel